DSH4R4

4”x 4”x 1/4” SPRING HINGE
STEEL

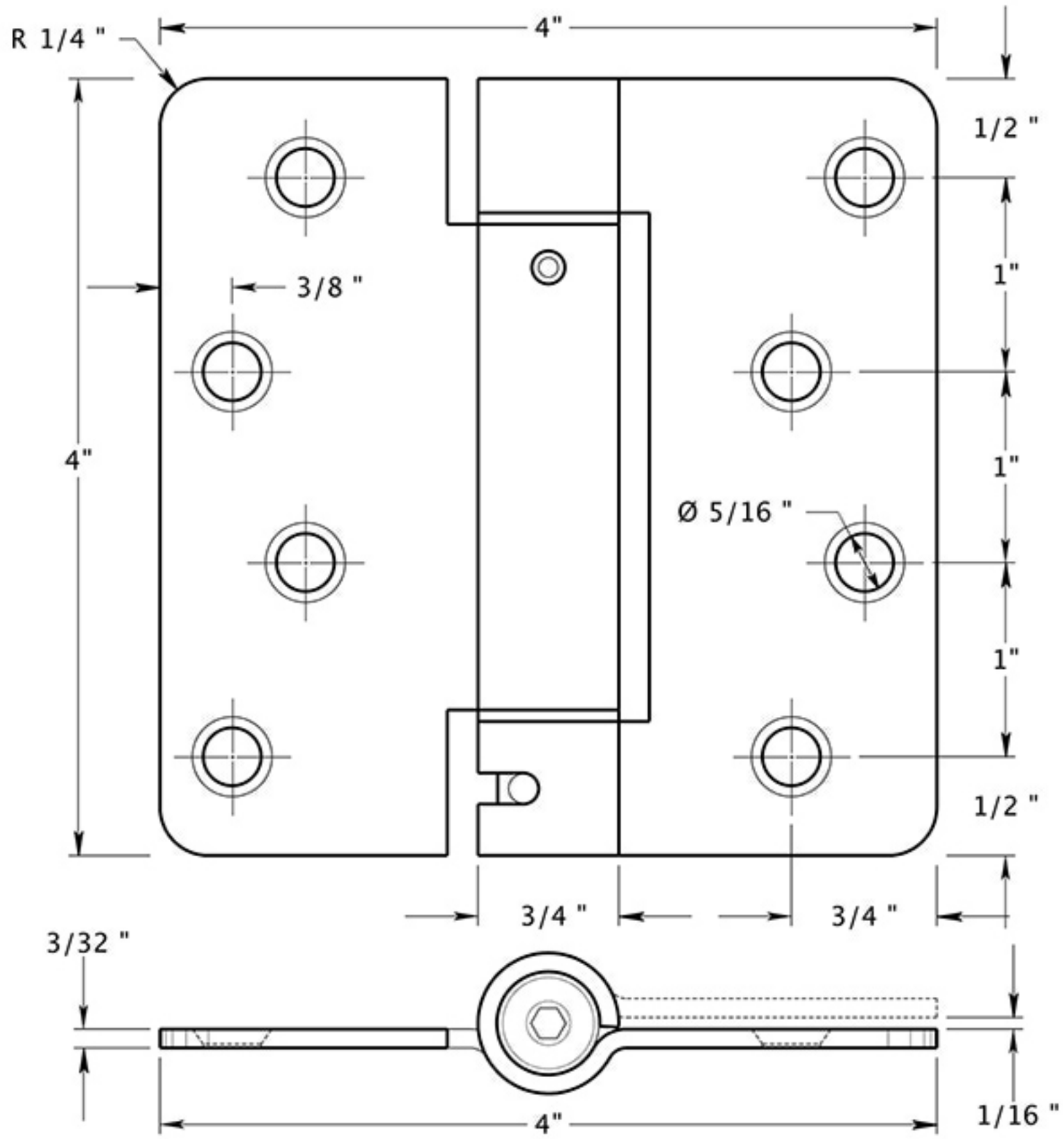

MAXIMUM RECOMMENDED DOOR SIZE 3'-0" WIDE x 7'-0" HEIGHT				
MAXIMUM RECOMMENDED DOOR WEIGHT (LBS)			HINGE SELECTIONS	
3.5" x 3.5"	4" x 4"	4.5" x 4.5"	Spring Hinges	Butt Hinges
50	60	70	1 EACH	2 EACH
70	85	115	2 EACH	1 EACH
90	110	150	3 EACH	NONE

NOTES:

1. Wind Condition, excessive air pressure on one side of the opening, weather stripping, for other adverse job conditions may require the use of all spring hinges.

2. For Maximum versatility, use all spring hinges.

DRAWING NOT TO SCALE

NOTE: Deltana reserves the right to constantly improve its products and is not responsible for differences between the product in-hand and the specifications contained in this drawing. We do not recommend to pre-drill holes or pre-cut woods or metals based on the drawing information if the veracity of the specifications has not been proven by the live product.